DATE: 07 April 2026

Our Ref: P14-25
Enquire to: Connor Ahnfeldt
Telephone: (07) 4747 3200

Mount Isa Day Nursery and Kindergarten Inc
C/- Paragon Consulting Engineers Pty Ltd
PO Box 1175
MACKAY QLD 4740

Brendon.Purnell@paragonce.com

Dear Mr Purnell

Decision Notice – Approval

Given under section 63 of the Planning Act 2016

I wish to advise that Council has approved the development application in full.

Details of the decision are as follows:

DATE OF DECISION

Council's Chief Executive Officer approved the Development Application by delegated authority on 07 April 2026.

APPLICATION DETAILS

Application No:	P14-26
Approval Sought:	Development Permit for Operational Works
Description of the Development	Road work, landscaping, stormwater, earthworks, water and sewerage infrastructure associated with child care centre development
Planning Scheme:	*City of Mount Isa Planning Scheme 2020*

LOCATION DETAILS

Street Address:	104 West Street, Mount Isa
Real Property Description:	Lot 73 on plan M75817

DECISION DETAILS

The following type of approval has been issued:

- Development Permit for Operational Works associated with proposed Childcare Centre development.

CURRENCY PERIOD

The use of the subject land must be commenced within a period of two (2) years from the date, unless otherwise stated, the approval takes effect in accordance with section 71 of the *Planning Act 2016*. Should the subject use not be commenced prior to the expiry of such period, this approval will lapse.

ASSESSMENT MANAGER CONDITIONS

This approval is subject to the conditions in Attachment 1.

PROPERLY MADE SUBMISSIONS

Not applicable – no part of the application required public notification.

REFERRAL AGENCIES

There were no referral agencies as part of this application.

FURTHER DEVELOPMENT PERMITS REQUIRED

- Development Permit for Plumbing and Drainage Work
- Development Permit for Building Work for all Retaining Structures over 1.0m in height
- Council Building Over Sewer Approval for all structures proposed over Council's sewer which cannot achieve the requirements of MP1.4 of the *Queensland Development Code*

OTHER REQUIREMENTS UNDER SECTION 43 OF THE PLANNING REGULATION 2017

Not Applicable

APPROVED PLANS AND SPECIFICATIONS

The approved plans are attached to this Decision Notice (Attachment 2)

RIGHTS OF APPEAL

You are entitled to appeal against this decision. A copy of the relevant appeal provisions from the Planning Act 2016 is attached (Attachment 4).

OTHER DETAILS

You are further advised that the truth and accuracy of the information provided in the application form and accompanying information is relied on when assessing and deciding this application. If you find an inaccuracy in any of the information provided above or have a query or need to seek clarification about any of these details, please contact Mount Isa City Council on (07) 4747 3200.

DELEGATED PERSON

Tim Rose
Chief Executive Officer

Enc. **Attachment 1** – Conditions imposed by the Assessment Manager
Attachment 2 – Approved Plans
Attachment 3 – Notice about a Decision Notice
Attachment 4 – Extract of Appeal Provisions (*Planning Act 2016*)

ATTACHMENT 1

CONDITIONS IMPOSED BY THE ASSESSMENT MANAGER

NUMBER	CONDITION	TIMING
PLANNING		
General		
1.	The development must be completed and maintained generally in accordance with the approved plans and documents, except where amended by the conditions of this approval.	*At all times*

Drawing No.	Document Name	Revision	Date	Prepared by
3155-01-003	GENERAL LAYOUT	A	17/02/2026	PARAGON Consulting Engineers Pty Ltd
3155-01-004	EARTHWORKS	A	17/02/2026	PARAGON Consulting Engineers Pty Ltd
3155-01-005	CARPARK LEVELS	A	17/02/2026	PARAGON Consulting Engineers Pty Ltd
3155-01-006	PAVEMENT	A	17/02/2026	PARAGON Consulting Engineers Pty Ltd
3155-01-008	FOOTPATH SECTIONS	A	17/02/2026	PARAGON Consulting Engineers Pty Ltd
3155-01-009	SETOUT	A	17/02/2026	PARAGON Consulting Engineers Pty Ltd
3155-01-010	STORMWATER	A	17/02/2026	PARAGON Consulting Engineers Pty Ltd
3155-01-012	STORMWATER SETOUT AND DETAILS	A	17/02/2026	PARAGON Consulting Engineers Pty Ltd
3155-01-015	RETAINING WALL DETAILS	A	17/02/2026	PARAGON Consulting Engineers Pty Ltd
3155-01-016	SIGNS, LINEMARKING & PARKING FURNITURE	A	17/02/2026	PARAGON Consulting Engineers Pty Ltd

2.	Where there is a conflict between the conditions of this approval and the details shown on the approved plans and documents, the conditions of approval must prevail.	*At all times*
3.	The owner/developer shall bear the cost of all alterations necessary to public utility mains, services or installations necessitated by this approval and such works shall be to Council specifications and satisfaction;	*As specified*
Engineering Works and Services		
4.	Submit the finalised retaining wall Structure over the sewer along the Building structure according to the referred QDC Code.	*Prior to the commencement of the works*
5.	Provide a Stormwater Quality Management Plan (SQMP) prepared in accordance with the Water Quality Code (9.4.4), demonstrating compliance with stormwater design objectives for the operational phase.	*Prior to the commencement of the works*
6.	The Erosion and Sediment Control Plan (Drawing 3155-01-017) must be implemented and maintained	*During construction*
7.	All works on Local Government roads (including vehicle crossing, footpath, and kerb/channel works) must be inspected and approved by Council prior to compaction and sealing. Hold points as defined in the Technical Specification must be observed.	*During construction*
8.	All underground services must be located prior to any excavation. Services authorities (Ergon, Telstra, NBN, Council) to be notified. Potholing is required for all underground services.	*During construction*
9.	Traffic management measures must be implemented during construction in accordance with the construction estimate provisions and to the satisfaction of Council.	*During construction*

ATTACHMENT 2

APPROVED PLANS

Attached under separate cover (this page has been intentionally left blank)

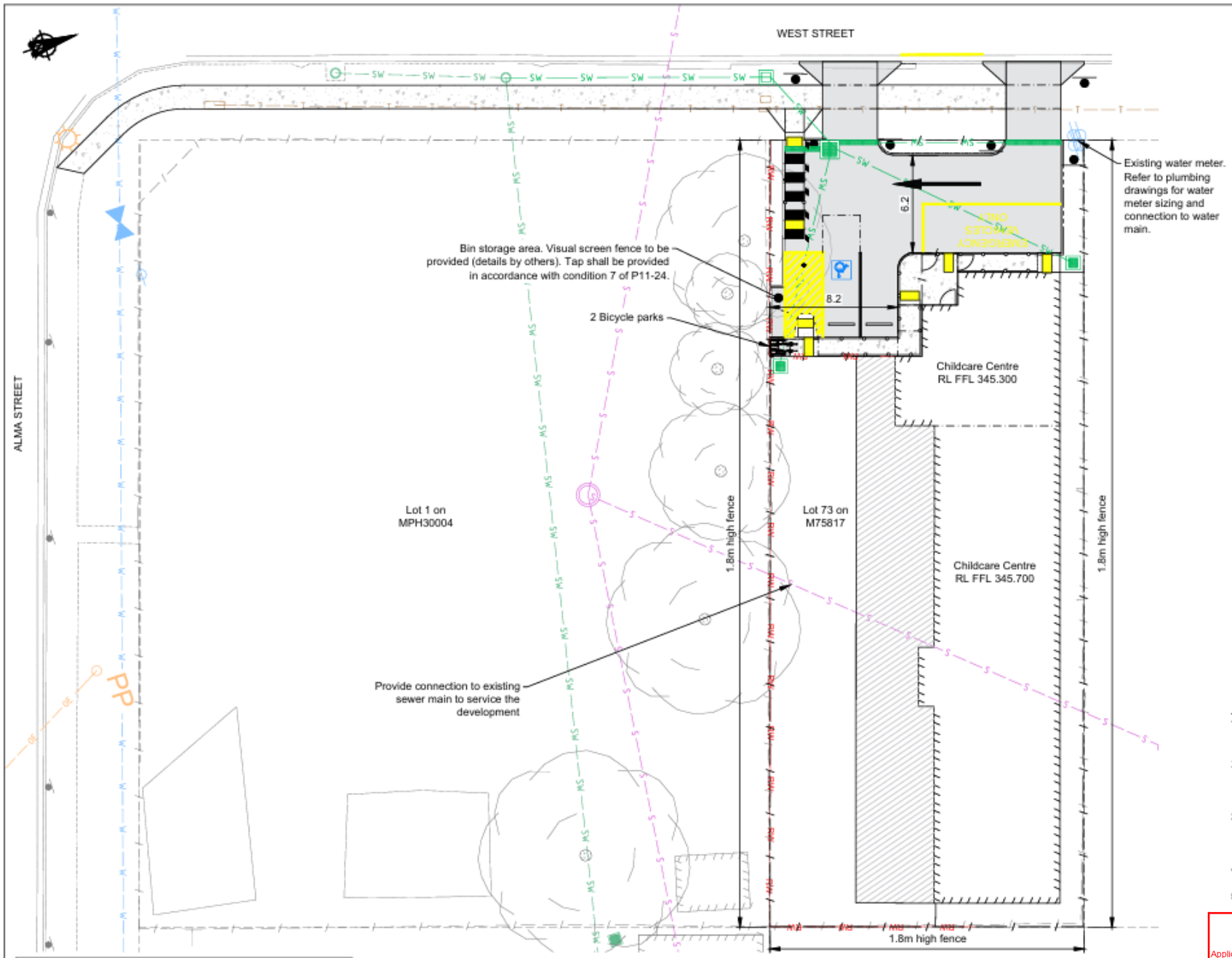

LEGEND

	Existing Lot Boundary
	Existing Change of Grade
	Existing Barrier Kerb & Channel
	Existing Building Edge
	Existing Concrete Edge
	Existing Fence
	Existing Signs
	Existing Trees
	Existing Overhead Electrical Line
	Existing Street Lighting
	Existing Power Poles
	Existing Gravity Sewer & Manhole
	Existing Stormwater Pipe & Manhole
	Existing Stormwater Pits
	Existing Potable Water Line
	Existing Potable Water Gate Valve
	Existing Potable Water Meter
	Existing Telecommunication Cable & Pit
	Proposed Retaining Wall
	Proposed Handrail
	Proposed Barrier Kerb & Channel
	Proposed Concrete Edge
	Proposed Building
	Proposed Fence
	Proposed Signs
	Proposed Stormwater Pipe & Manhole
	Proposed Stormwater Pits
	Proposed Concrete Pavement
	Proposed Concrete Area

GENERAL NOTES

1. All works that are included on these engineering plans are to be carried out in accordance with the project Technical Specification, and to the satisfaction of the Project Superintendent.
2. No work associated with these drawings is to commence on site until approval is provided from the Local Authority, and the Contractor receives written approval from the Superintendent. A pre-start meeting must be held prior to commencement of works.
3. It is the responsibility of the Contractor to contact the services authorities (including but not limited to Ergon Energy, Telstra, NBN and the Local Authority) and locate existing underground services prior to any excavation works commencing on site.
4. Any damage caused to existing infrastructure as a result of construction works is to be repaired immediately.
5. A solid 1.8m high fence shall be provided for the full length of the northern, eastern and southern property boundaries.

MOUNT ISA CITY COUNCIL
DIGITAL STAMP
APPROVED PLAN
Application No.: P14-26
Development Approval: Development Permit for Operational Works
Applied Use: Road work, landscaping, stormwater, earthworks, water and sewerage infrastructure associated with child care centre development
Lot details: Lot 73 on Plan M75817
Street Address: 104 West Street Mount Isa
Approved by Decision Notice: 07 April 2026

PPROVAL
ONSTRUCTION)

POSITIONS OF EXISTING SERVICES SHOWN ARE PROVIDED FOR GUIDANCE ONLY AND LOCATIONS AND/OR DEPTHS MAY BE INCORRECT. ALSO ADDITIONAL EXISTING SERVICES MAY BE PRESENT ON SITE. IT IS THE RESPONSIBILITY OF THE CONTRACTOR TO VERIFY THE POSITION OF ALL EXISTING SERVICES ON SITE.

No.	Date	Revisions	Drafted	Designed	Approved	MPBQ No.
A	17/02/2026	FOR APPROVAL				19819

PARAGON Consulting Engineers Pty Ltd
Address: 96 Sydney Street, P.O. Box 1175, Mackay QLD 4740
Telephone: (07) 4957 7330
Facsimile: (07) 4957 7334
E-Mail: mail@paragonce.com
Web Site: www.paragonce.com
ABN No: 43 109 991 886

Client: MOUNT ISA DAY NURSERY AND KINDERGARTEN

Project: CHILDCARE CENTRE AT 104 WEST STREET, MENZIES

Detail: GENERAL LAYOUT

Designed:	R.HUSKING	Scale(s):	1:250 (A3)
Reviewed:	B.PURNELL	Datum:	AHD
Approved:	B.PURNELL RPEQ 19819	PCE Job No:	3155-01
Drawing No:	3155-01-003	Rev. No:	A

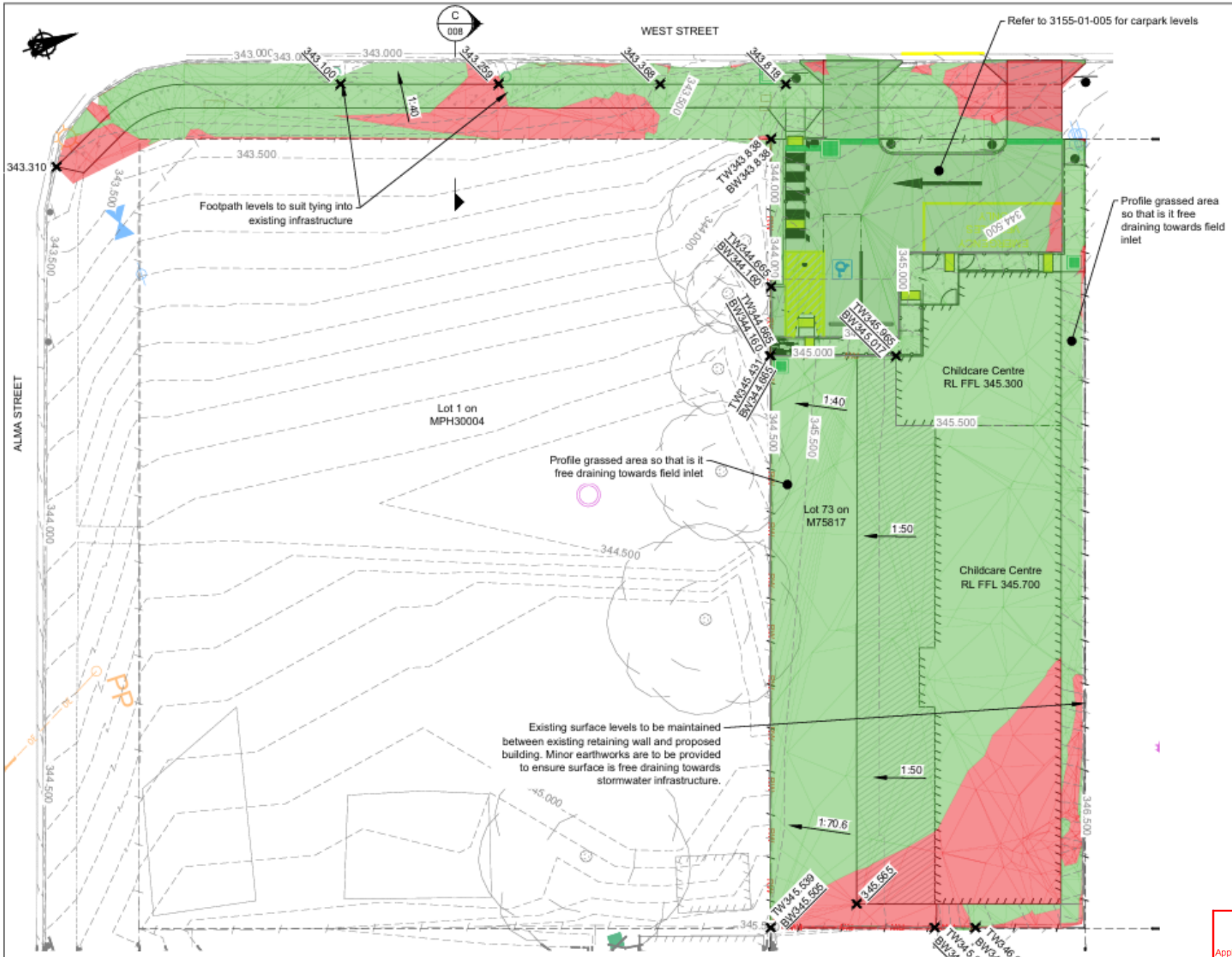

POSITIONS OF EXISTING SERVICES SHOWN ARE PROVIDED FOR GUIDANCE ONLY AND LOCATIONS AND/OR DEPTHS MAY BE INCORRECT. ALSO ADDITIONAL EXISTING SERVICES MAY BE PRESENT ON SITE. IT IS THE RESPONSIBILITY OF THE CONTRACTOR TO VERIFY THE POSITION OF ALL EXISTING SERVICES ON SITE.

LEGEND

	Existing Lot Boundary
	Existing Change of Grade
	Existing Barrier Kerb & Channel
	Existing Building Edge
	Existing Concrete Edge
	Existing Fence
	Existing Signs
	Existing Trees
OE	Existing Overhead Electrical Line
	Existing Street Lighting
PP	Existing Power Poles
	Existing Gravity Sewer Manhole
	Existing Stormwater Manhole
	Existing Stormwater Pits
	Existing Potable Water Gate Valve
	Existing Potable Water Meter
	Existing Telecommunication Pit
RW	Proposed Retaining Wall
	Proposed Handrail
	Proposed Barrier Kerb & Channel
	Proposed Concrete Edge
	Proposed Building
	Proposed Fence
	Proposed Signs
	Proposed Stormwater Manhole
	Proposed Stormwater Pits
5.00	Existing Surface Level
5.00	Proposed Surface Level
TW5.00	Top of Retaining Wall Level
BW5.00	Bottom of Retaining Wall Level
	Proposed Earthworks Cut*
	Proposed Earthworks Fill*

* Cut and Fill hatches are based on the levels difference between the original surface and the top of the finished surface.

EARTHWORKS NOTES

1. Design levels shown are to top of finished surface level.
2. Areas to be disturbed are to be stripped of topsoil to a depth of 100mm (or as directed by the Superintendent). Topsoil is to be stockpiled on site and re-spread after earthworks are completed.
3. Earthworks compaction and testing to be in accordance with the requirements as detailed in the Technical Specification.
4. All earthworks shall be carried out under Level 2 as specified in AS3798 "Guidelines on earthworks for commercial and residential developments".

MOUNT ISA CITY COUNCIL
DIGITAL STAMP
APPROVED PLAN
Application No.: P14-25
Development Approval: Development Permit for Operational Works
Applied Use: Road work, landscaping, stormwater, earthworks, water and sewerage infrastructure associated with child care centre development
Lot details: Lot 73 on Plan M75817
Street Address: 104 West Street Mount Isa
Approved by Decision Notice: 07 April 2026

PROVAL
NSTRUCTION)

No.	Date	Revisions	Drafted	Designed	Approved	RPEQ No.
A	17/03/2026	FOR APPROVAL				19819

PARAGON Consulting Engineers Pty Ltd

Address: 96 Sydney Street, P.O. Box 1175, Mackay QLD 4740
Telephone: (07) 4957 7330
Facsimile: (07) 4957 7334
E-Mail: mail@paragonce.com
Web Site: www.paragonce.com
ABN No: 43 109 991 888

Client: MOUNT ISA DAY NURSERY AND KINDERGARTEN

Project: CHILDCARE CENTRE AT 104 WEST STREET, MENZIES

Detail: EARTHWORKS

Designed:	R.HUSKING	Scale(s):	1:250 (A3)
Reviewed:	B.PURNELL	Datum:	AHD
Approved:	B.PURNELL RPEQ 19819	PCE Job No:	3155-01
Drawing No:	3155-01-004	Rev. No:	A

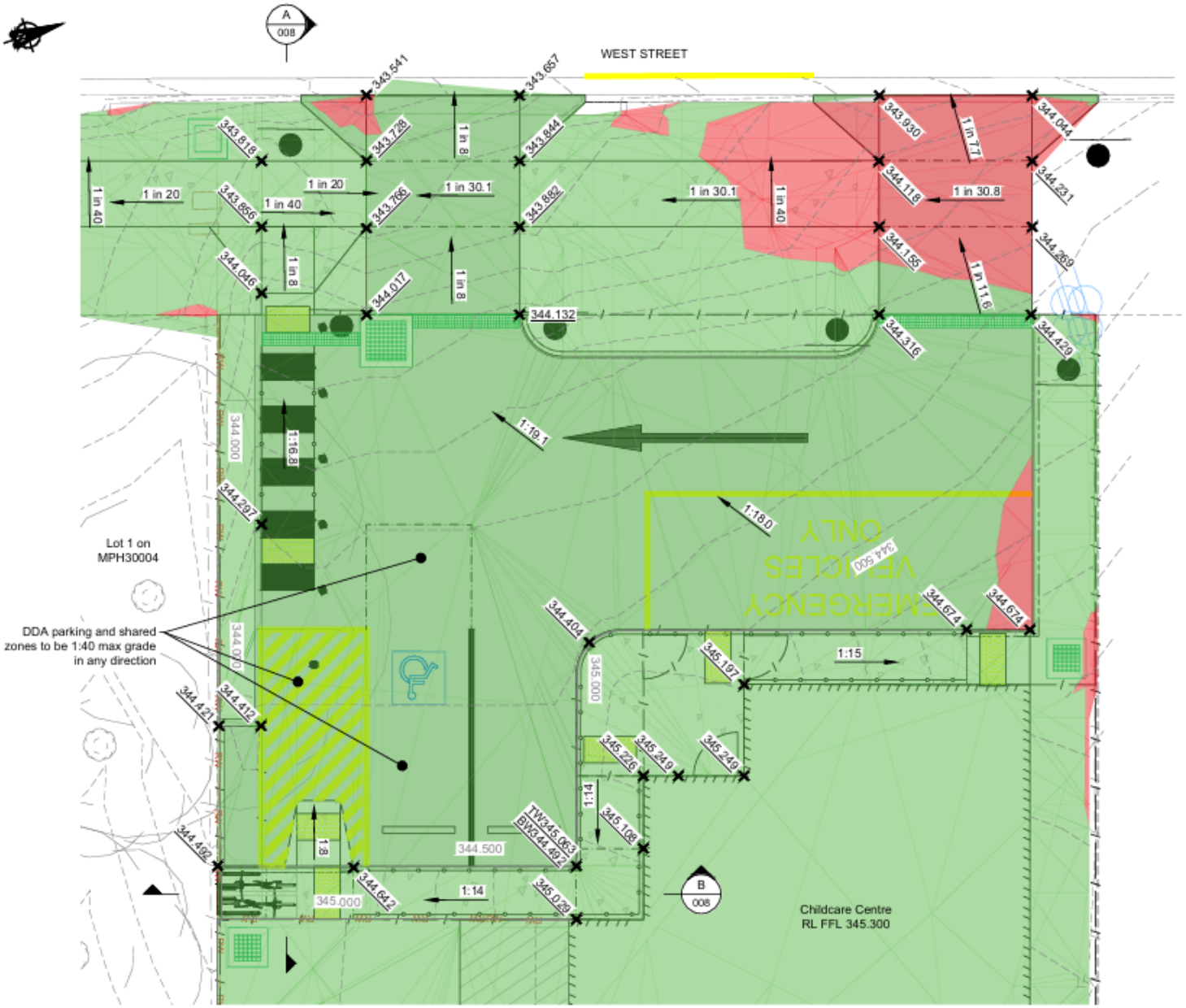

LEGEND

	Existing Lot Boundary
	Existing Change of Grade
	Existing Barrier Kerb & Channel
	Existing Building Edge
	Existing Concrete Edge
	Existing Fence
	Existing Signs
	Existing Trees
OE	Existing Overhead Electrical Line
	Existing Street Lighting
PP	Existing Power Poles
	Existing Gravity Sewer Manhole
	Existing Stormwater Manhole
	Existing Stormwater Pits
	Existing Potable Water Gate Valve
	Existing Potable Water Meter
	Existing Telecommunication Pit
RW	Proposed Retaining Wall
	Proposed Handrail
	Proposed Barrier Kerb & Channel
	Proposed Concrete Edge
	Proposed Building
	Proposed Fence
	Proposed Signs
	Proposed Stormwater Manhole
	Proposed Stormwater Pits
5.00	Existing Surface Level
5.00	Proposed Surface Level
TW5.00	Top of Retaining Wall Level
BW5.00	Bottom of Retaining Wall Level
	Proposed Earthworks Cut*
	Proposed Earthworks Fill*

* Cut and Fill hatches are based on the levels difference between the original surface and the top of the finished surface.

EARTHWORKS NOTES

1. Design levels shown are to top of finished surface level.
2. Areas to be disturbed are to be stripped of topsoil to a depth of 100mm (or as directed by the Superintendent). Topsoil is to be stockpiled on site and re-spread after earthworks are completed.
3. Earthworks compaction and testing to be in accordance with the requirements as detailed in the Technical Specification.
4. All earthworks shall be carried out under Level 2 as specified in AS3798 "Guidelines on earthworks for commercial and residential developments".

MOUNT ISA CITY COUNCIL
DIGITAL STAMP
APPROVED PLAN
Application No.: P14-25
Development Approval: Development Permit for Operational Works
Applied Use: Road work, landscaping, stormwater, earthworks, water and sewerage infrastructure associated with child care centre development
Lot details: Lot 73 on Plan M75817
Street Address: 104 West Street Mount Isa
Approved by Decision Notice: 07 April 2026

POSITIONS OF EXISTING SERVICES SHOWN ARE PROVIDED FOR GUIDANCE ONLY AND LOCATIONS AND/OR DEPTHS MAY BE INCORRECT. ALSO ADDITIONAL EXISTING SERVICES MAY BE PRESENT ON SITE. IT IS THE RESPONSIBILITY OF THE CONTRACTOR TO VERIFY THE POSITION OF ALL EXISTING SERVICES ON SITE.

PROVAL
NSTRUCTION)

No.	Date	Revisions	Drafted	Designed	Approved	RPEQ No.
A	17/02/2026	FOR APPROVAL				19819

PARAGON Consulting Engineers Pty Ltd

Address: 96 Sydney Street, P.O. Box 1175, Mackay QLD 4740
Telephone: (07) 4957 7330
Facsimile: (07) 4957 7334
E-Mail: mail@paragonce.com
Web Site: www.paragonce.com
ABN No: 43 109 991 888

Client: MOUNT ISA DAY NURSERY AND KINDERGARTEN

Project: CHILDCARE CENTRE AT 104 WEST STREET, MENZIES

Detail: CARPARK LEVELS

Designed:	R.HUSKING	Scale(s):	1:100 (A3)
Reviewed:	B.PURNELL	Datum:	AHD
Approved:	B.PURNELL RPEQ 19819	PCE Job No:	3155-01
Drawing No:	3155-01-005	Rev. No:	A

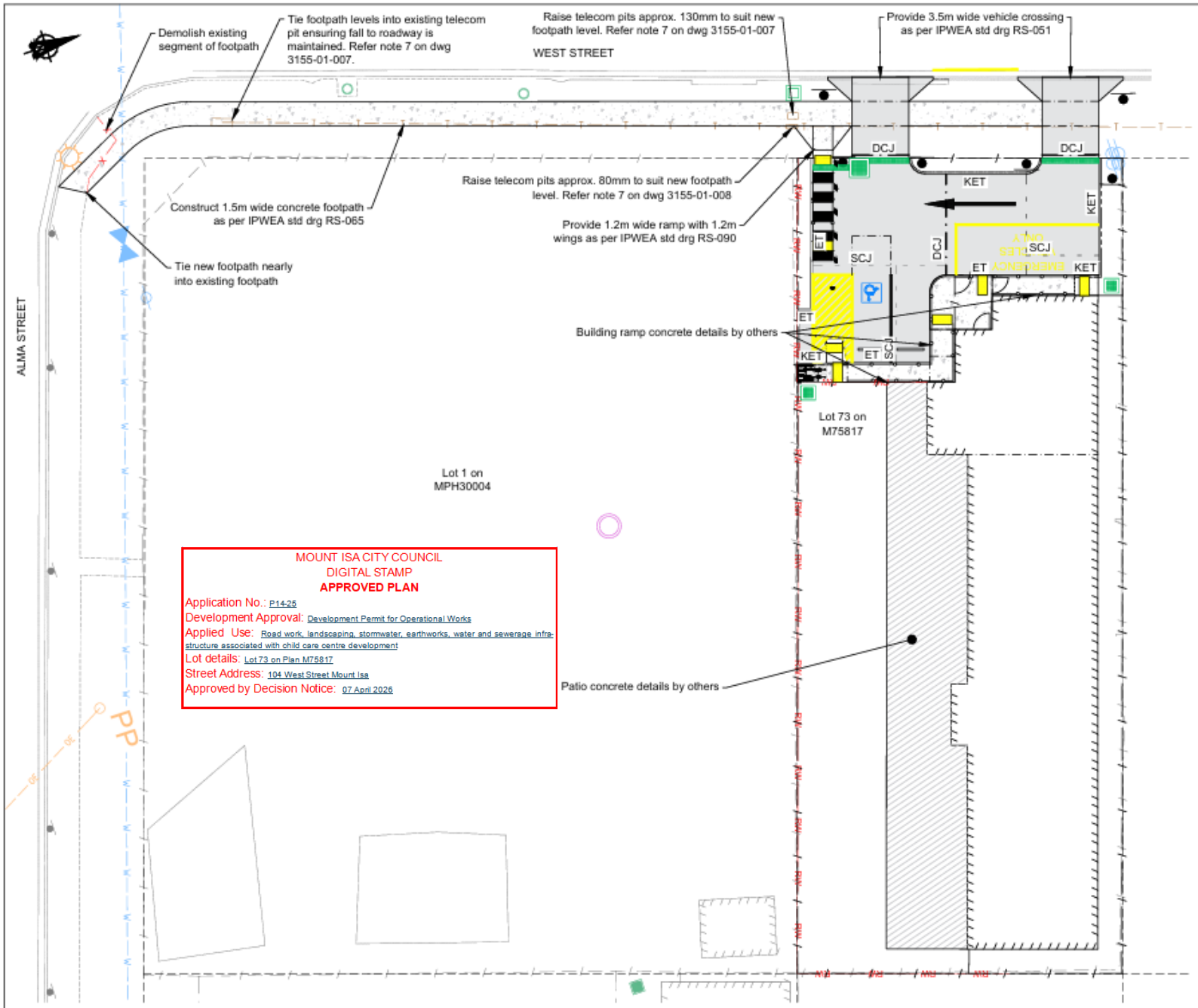

MOUNT ISA CITY COUNCIL
DIGITAL STAMP
APPROVED PLAN

Application No.: P14-25
Development Approval: Development Permit for Operational Works
Applied Use: Road work, landscaping, stormwater, earthworks, water and sewerage infrastructure associated with child care centre development
Lot details: Lot 73 on Plan M75817
Street Address: 104 West Street Mount Isa
Approved by Decision Notice: 07 April 2026

LEGEND

	Existing Lot Boundary
	Existing Change of Grade
	Existing Barrier Kerb & Channel
	Existing Building Edge
	Existing Concrete Edge
	Existing Fence
	Existing Signs
	Existing Trees
OE	Existing Overhead Electrical Line
	Existing Street Lighting
PP	Existing Power Poles
S	Existing Gravity Sewer & Manhole
SW	Existing Stormwater Pipe & Manhole
	Existing Stormwater Pits
W	Existing Potable Water Line & Fire Hydrant
	Existing Potable Water Gate Valve
	Existing Potable Water Meter
T	Existing Telecommunication Cable & Pit
RW	Proposed Retaining Wall
	Proposed Handrail
	Proposed Barrier Kerb & Channel
	Proposed Concrete Edge
	Proposed Building
	Proposed Fence
	Proposed Signs
	Proposed Stormwater Manhole
	Proposed Stormwater Pits
	Proposed Concrete Pavement
	Proposed Concrete Area
DCJ	Proposed Dowel Construction Joint
SCJ	Proposed Saw Cut Joint
KET	Proposed Kerb Edge Thickening
ER	Proposed Edge Restraint

PAVEMENT DETAILS

1. Concrete pavement to be 150mm thick reinforced 32MPa concrete with SL82 mesh placed at 1/3rd depth.
2. Concrete footpath to be 100mm thick reinforced as per IPWEA std drg RS-065.

POSITIONS OF EXISTING SERVICES SHOWN ARE PROVIDED FOR GUIDANCE ONLY AND LOCATIONS AND/OR DEPTHS MAY BE INCORRECT. ALSO ADDITIONAL EXISTING SERVICES MAY BE PRESENT ON SITE. IT IS THE RESPONSIBILITY OF THE CONTRACTOR TO VERIFY THE POSITION OF ALL EXISTING SERVICES ON SITE.

PRINT IN COLOUR

FOR APPROVAL
(NOT FOR CONSTRUCTION)

No.	Date	Revisions	Drafted	Designed	Approved	RPEQ No.
A	17/02/2026	FOR APPROVAL				19819

PARAGON Consulting Engineers Pty Ltd
Address: 96 Sydney Street, P.O. Box 1175, Mackay QLD 4740
Telephone: (07) 4957 7330
Facsimile: (07) 4957 7334
E-Mail: mail@paragonce.com
Web Site: www.paragonce.com
ABN No: 40 109 991 888

Client: MOUNT ISA DAY NURSERY AND KINDERGARTEN

Project: CHILDCARE CENTRE AT 104 WEST STREET, MENZIES

Detail: PAVEMENT

Designed:	R.HUSKING	Scale(s):	1:250 (A3)
Reviewed:	B.PURNELL	Datum:	AHD
Approved:	B.PURNELL RPEQ 19819	PCE Job No:	3155-01
Drawing No:	3155-01-006	Rev. No:	A

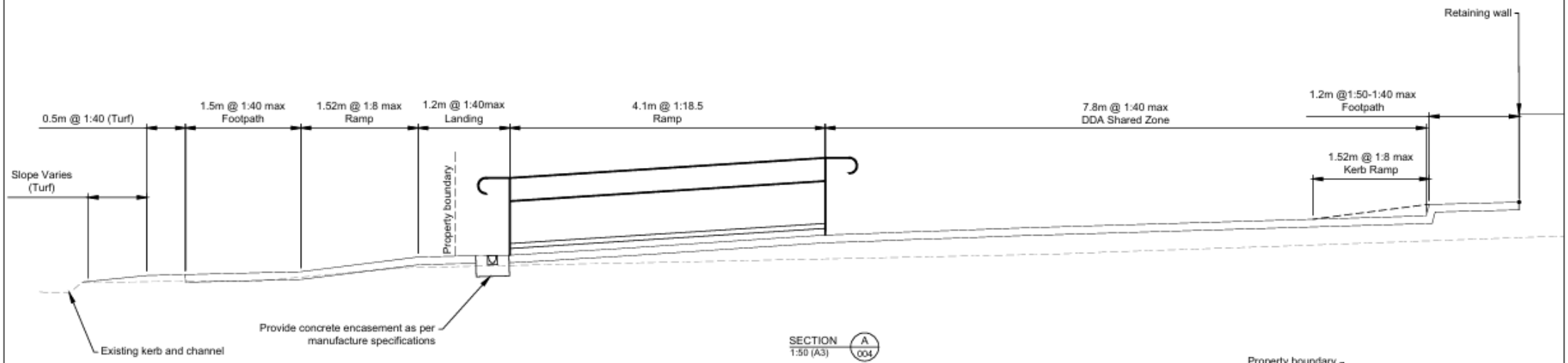

SECTION A 004
1:50 (A3)

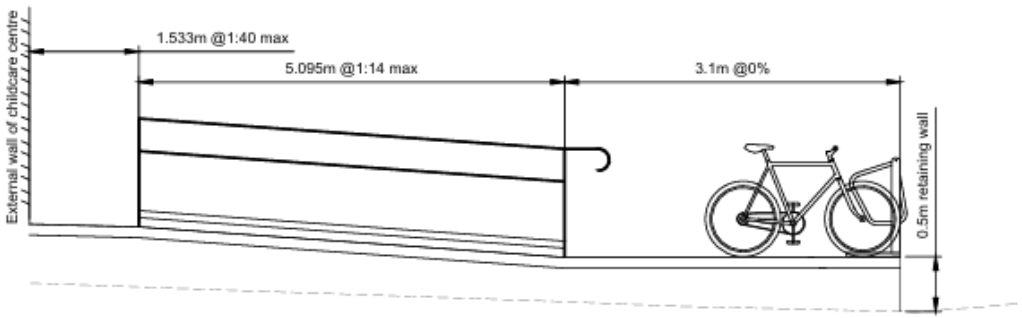

SECTION B 004
1:50 (A3)

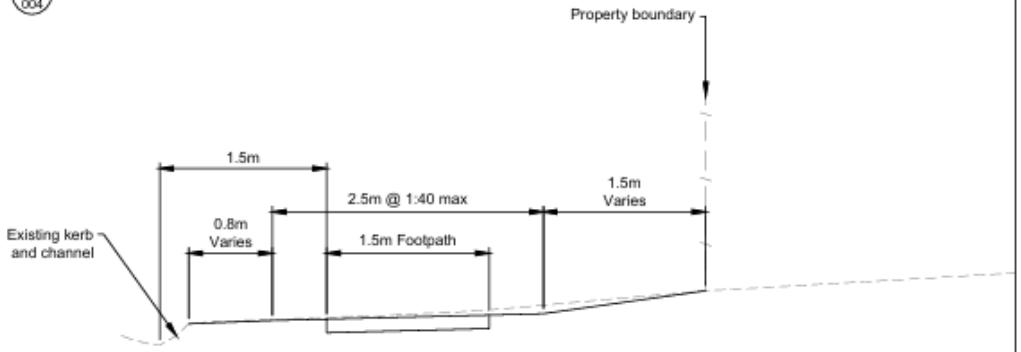

SECTION C 004
1:50 (A3)

MOUNT ISA CITY COUNCIL
DIGITAL STAMP
APPROVED PLAN
Application No.: P14-25
Development Approval: Development Permit for Operational Works
Applied Use: Road work, landscaping, stormwater, earthworks, water and sewerage infrastructure associated with child care centre development
Lot details: Lot 73 on Plan M75817
Street Address: 104 West Street Mount Isa
Approved by Decision Notice: 07 April 2026

POSITIONS OF EXISTING SERVICES SHOWN ARE PROVIDED FOR GUIDANCE ONLY AND LOCATIONS AND/OR DEPTHS MAY BE INCORRECT. ALSO ADDITIONAL EXISTING SERVICES MAY BE PRESENT ON SITE. IT IS THE RESPONSIBILITY OF THE CONTRACTOR TO VERIFY THE POSITION OF ALL EXISTING SERVICES ON SITE.

Scale 1:50 (Metres)

PRINT IN COLOUR

FOR APPROVAL
(NOT FOR CONSTRUCTION)

No.	Date	Revisions	Drafted	Designed	Approved	RPEQ No.
A	17/02/2026	FOR APPROVAL				19819

PARAGON Consulting Engineers Pty Ltd
Address: 96 Sydney Street P.O. Box 1175 Mackay QLD 4740
Telephone: (07) 4957 7330
Facsimile: (07) 4957 7334
E-Mail: mail@paragonce.com
Web Site: www.paragonce.com
ABN No: 43 109 991 886

Client: MOUNT ISA DAY NURSERY AND KINDERGARTEN

Project: CHILDCARE CENTRE AT 104 WEST STREET, MENZIES

Detail: FOOTPATH SECTIONS

Designed:	R.HUSKING	Scale(s):	1:50 (A3)
Reviewed:	B.PURNELL	Datum:	AHD
Approved:	B.PURNELL RPEQ 19819	PCE Job No:	3155-01
Drawing No:	3155-01-008	Rev. No:	A

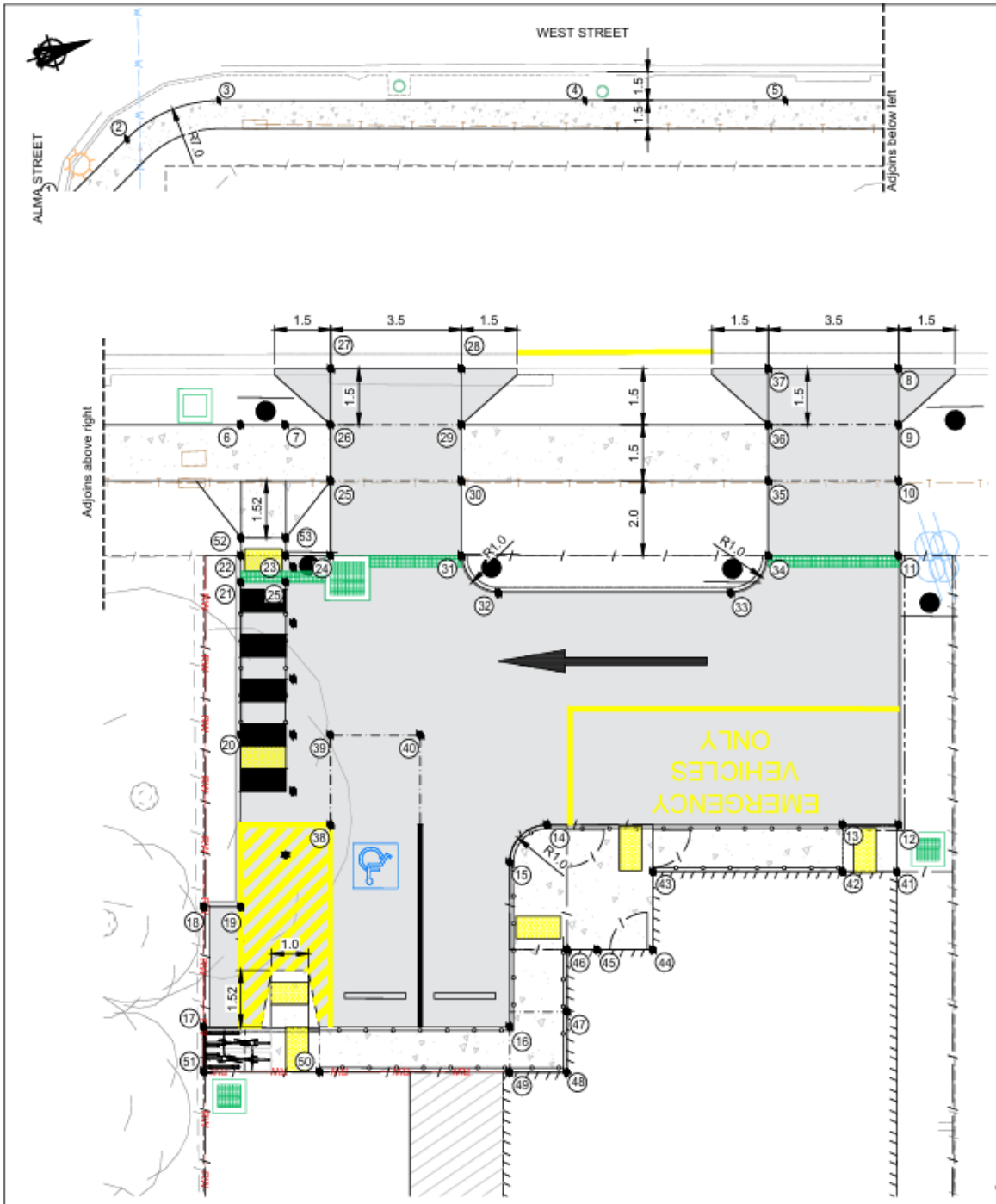

SETOUT CO-ORDINATES				
Point No.	Easting	Northing	Level	
1	2944.628	8243.942	343.310	Footpath
2	2942.585	8247.991	343.296	
3	2942.183	8253.329	343.280	
4	2948.414	8272.304	343.220	
5	2951.349	8281.243	343.368	
6	2954.156	8289.794	343.818	
7	2954.531	8290.934	343.788	
8	2958.232	8306.999	344.044	Carpark and driveway (along invert of kerb)
9	2959.657	8306.531	344.231	
10	2961.082	8306.062	344.269	
11	2962.988	8305.436	344.429	
12	2969.827	8303.187	344.674	
13	2969.359	8301.761	344.674	
14	2966.886	8294.239	344.412	
15	2967.524	8292.977	344.402	
16	2971.703	8291.601	344.492	
17	2969.144	8283.819	344.492	
18	2966.101	8284.813	344.421	
19	2966.414	8285.763	344.412	
20	2962.052	8287.198	344.297	
21	2958.165	8288.477	344.076	
22	2957.487	8288.701	344.058	
23	2957.862	8289.841	344.028	
24	2958.236	8290.978	344.017	
25	2956.330	8291.604	343.766	
26	2954.905	8292.073	343.728	
27	2953.480	8292.541	343.541	
28	2954.572	8295.866	343.657	
29	2955.997	8295.398	343.845	
30	2957.422	8294.930	343.882	
31	2959.328	8294.303	344.133	
32	2960.590	8294.941	344.164	
33	2962.533	8300.850	344.285	
34	2961.895	8302.112	344.316	
35	2959.990	8302.738	344.155	
36	2958.565	8303.206	344.118	
37	2957.140	8303.674	343.930	
38	2965.080	8288.732	344.357	
39	2962.796	8289.483	344.297	
40	2963.543	8291.754	344.297	
41	2971.005	8302.746	344.849	Footpath
42	2970.552	8301.369	344.849	
43	2968.962	8296.539	345.197	
44	2970.947	8295.885	345.249	
45	2970.478	8294.461	345.249	
46	2970.228	8293.701	345.226	
47	2971.805	8293.182	345.108	
48	2973.344	8292.675	345.068	
49	2972.865	8291.219	345.029	
50	2971.259	8286.384	344.665	
51	2970.284	8283.441	344.665	
52	2957.026	8288.852	344.046	
53	2957.400	8289.992	344.016	

LEGEND

- Existing Lot Boundary
- Existing Change of Grade
- Existing Barrier Kerb & Channel
- Existing Building Edge
- Existing Concrete Edge
- Existing Fence
- Existing Signs
- Existing Trees
- Existing Street Lighting
- Existing Power Poles
- Existing Gravity Sewer & Manhole
- Existing Stormwater Pipe & Manhole
- Existing Stormwater Pits
- Existing Potable Water Line & Fire Hydrant
- Existing Potable Water Gate Valve
- Existing Potable Water Meter
- Existing Telecommunication Cable & Pit
- Proposed Retaining Wall
- Proposed Handrail
- Proposed Barrier Kerb & Channel
- Proposed Concrete Edge
- Proposed Building
- Proposed Fence
- Proposed Signs
- Proposed Stormwater Pipe & Manhole
- Proposed Stormwater Pits
- Proposed Concrete Pavement
- Proposed Concrete Area
- Proposed Setout

MOUNT ISA CITY COUNCIL
DIGITAL STAMP
APPROVED PLAN
Application No.: P14-25
Development Approval: Development Permit for Operational Works
Applied Use: Road work, landscaping, stormwater, earthworks, water and sewerage infrastructure associated with child care centre development
Lot details: Lot 73 on Plan M75817
Street Address: 104 West Street Mount Isa
Approved by Decision Notice: 07 April 2026

POSITIONS OF EXISTING SERVICES SHOWN ARE PROVIDED FOR GUIDANCE ONLY AND LOCATIONS AND/OR DEPTHS MAY BE INCORRECT. ALSO ADDITIONAL EXISTING SERVICES MAY BE PRESENT ON SITE. IT IS THE RESPONSIBILITY OF THE CONTRACTOR TO VERIFY THE POSITION OF ALL EXISTING SERVICES ON SITE.

PRINT IN COLOUR

FOR APPROVAL
(NOT FOR CONSTRUCTION)

No.	Date	Revisions	Drafted	Designed	Approved	RPEQ No.
A	17/02/2026	FOR APPROVAL				19819

PARAGON Consulting Engineers Pty Ltd
Address: 96 Sydney Street, P.O. Box 1176, Mackay QLD 4740
Telephone: (07) 4957 7330
Facsimile: (07) 4957 7334
E-Mail: mail@paragonce.com
Web Site: www.paragonce.com
ABN No: 43 109 991 886

Client: MOUNT ISA DAY NURSERY AND KINDERGARTEN

Project: CHILDCARE CENTRE AT 104 WEST STREET, MENZIES

Detail: SETOUT

Designed:	R.HUSKING	Scale(s):	As Shown
Reviewed:	B.PURNELL	Datum:	AHD
Approved:	B.PURNELL RPEQ 19819	PCE Job No:	3155-01
Drawing No:	3155-01-009	Rev. No:	A

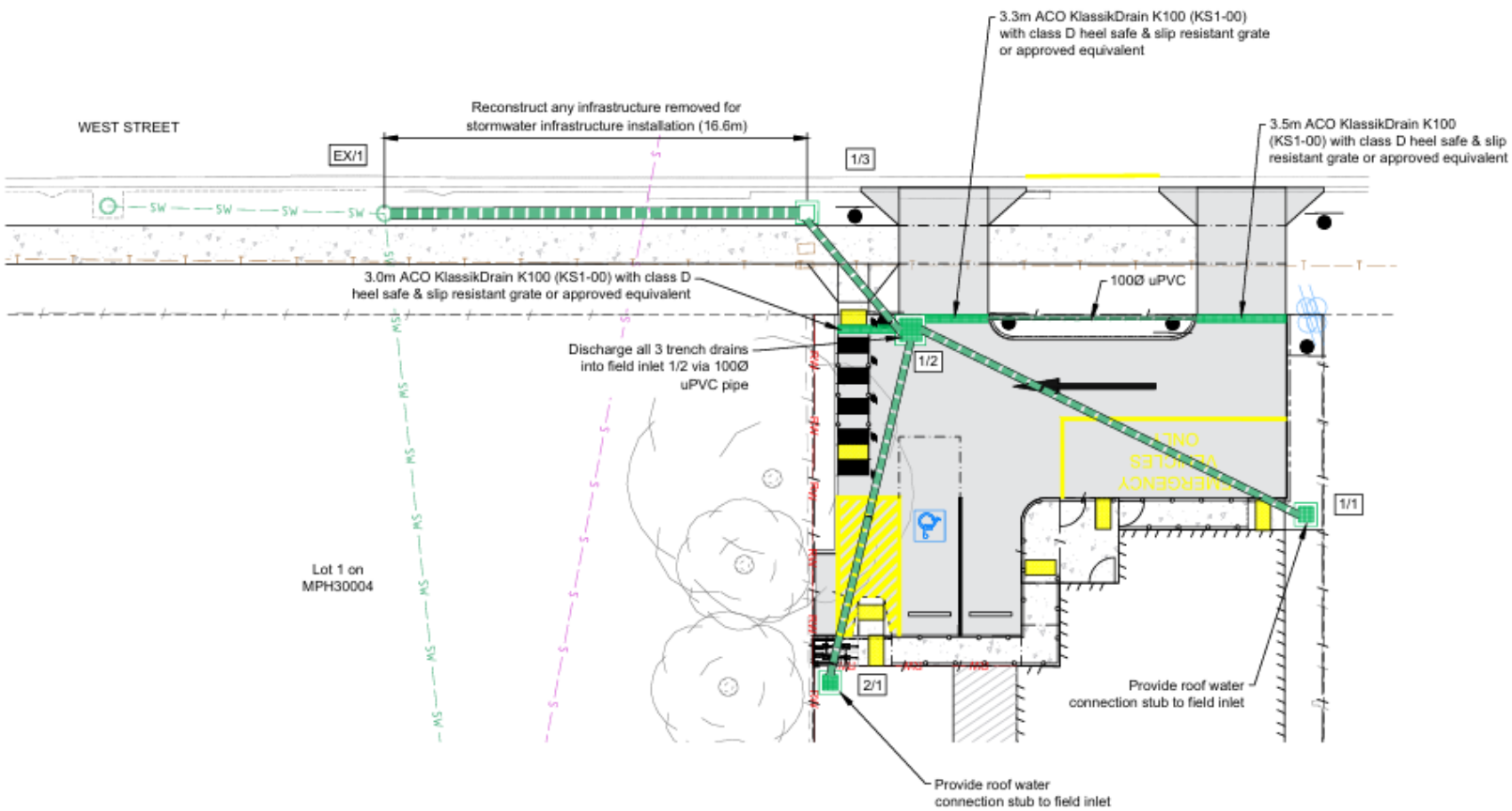

LEGEND

	Existing Lot Boundary
	Existing Change of Grade
	Existing Barrier Kerb & Channel
	Existing Building Edge
	Existing Concrete Edge
	Existing Fence
	Existing Signs
	Existing Trees
	Existing Street Lighting
PP	Existing Power Poles
S	Existing Gravity Sewer & Manhole
SW	Existing Stormwater Pipe & Manhole
	Existing Stormwater Pits
W	Existing Potable Water Line & Fire Hydrant
	Existing Potable Water Gate Valve
	Existing Potable Water Meter
T	Existing Telecommunication Cable & Pit
RW	Proposed Retaining Wall
	Proposed Handrail
	Proposed Barrier Kerb & Channel
	Proposed Concrete Edge
	Proposed Building
	Proposed Fence
	Proposed Signs
	Proposed Concrete Pavement
	Proposed Concrete Area
	Proposed Stormwater Pipe
	Proposed Stormwater Pits
	Proposed Stormwater Manhole

STORMWATER NOTES

1. Setout coordinates for stormwater manhole and field inlet pit structures are for the centre of the pit chamber.
2. Pipe lengths are measured from centre of pit to centre of pit
3. For stormwater pipe bedding and backfill details refer to the Specification.
4. 28 day concrete strength is to be min 32MPa.
5. Pipe classes nominated are based on 'in service' pipe loads only and do not account for construction loads. Contractor to be aware of this and take adequate precautions during construction to ensure pipe integrity is retained after completion of the works.
6. All retaining wall subsoil drainage pipes are to be 100Ø PVC (non perforated).
7. Prior to commencing construction work, the contractor shall survey the proposed stormwater discharge (structure Ex/1) to confirm that the invert level is as per these drawings. The contractor shall contact Paragon Consulting Engineers if there are any discrepancies between the invert level shown on these drawings and the surveyed invert level.

MOUNT ISA CITY COUNCIL
DIGITAL STAMP
APPROVED PLAN

Application No.: P14-25
Development Approval: Development Permit for Operational Works
Applied Use: Road work, landscaping, stormwater, earthworks, water and sewerage infrastructure associated with child care centre development
Lot details: Lot 73 on Plan M75817
Street Address: 104 West Street Mount Isa
Approved by Decision Notice: 07 April 2026

POSITIONS OF EXISTING SERVICES SHOWN ARE PROVIDED FOR GUIDANCE ONLY AND LOCATIONS AND/OR DEPTHS MAY BE INCORRECT. ALSO ADDITIONAL EXISTING SERVICES MAY BE PRESENT ON SITE. IT IS THE RESPONSIBILITY OF THE CONTRACTOR TO VERIFY THE POSITION OF ALL EXISTING SERVICES ON SITE.

PRINT IN COLOUR

FOR APPROVAL
(NOT FOR CONSTRUCTION)

No.	Date	Revisions	Drafted	Designed	Approved	RPEQ No.
A	17/02/2026	FOR APPROVAL				19819

PARAGON Consulting Engineers Pty Ltd
Address: 96 Sydney Street, P.O. Box 1175, Mackay QLD 4740
Telephone: (07) 4957 7330
Facsimile: (07) 4957 7334
E-Mail: mail@paragonce.com
Web Site: www.paragonce.com
ABN No: 43 109 991 888

Client: MOUNT ISA DAY NURSERY AND KINDERGARTEN
Project: CHILDCARE CENTRE AT 104 WEST STREET, MENZIES
Detail: STORMWATER

Designed:	R.HUSKING	Scale(s):	1:200 (A3)
Reviewed:	B.PURNELL	Datum:	AHD
Approved:	B.PURNELL RPEQ 19819	PCE Job No:	3155-01
Drawing No:	3155-01-010	Rev. No:	A

STORMWATER STRUCTURE INFORMATION TABLE						
STRUCTURE	DESCRIPTION	LOCATION		PIT LID LEVEL	CHAMBER SIZE (INTERNAL)	DETAILS
		EASTING	NORTHING			
1/1	600 x 600 Grated Inlet	2970.685	8303.694	344.870	600 (L) x 600 (W)	Refer to manhole details on this drawing.
1/2	900 x 900 Grated Inlet	2958.946	8291.218	344.056	900 (L) x 900 (W)	Refer to grated inlet details on this drawing.
1/3	600 x 600 Manhole	2953.289	8288.787	343.742	600 (L) x 600 (W)	Refer to manhole details on this drawing.
DM06.PIT.110	Existing roadway gully (Ex/1)	-	-	-	1200 (L) x 1300 (W)	-
2/1	600 x 600 Grated Inlet	2971.124	8283.886	345.445	600 (L) x 600 (W)	Refer to manhole details on this drawing.

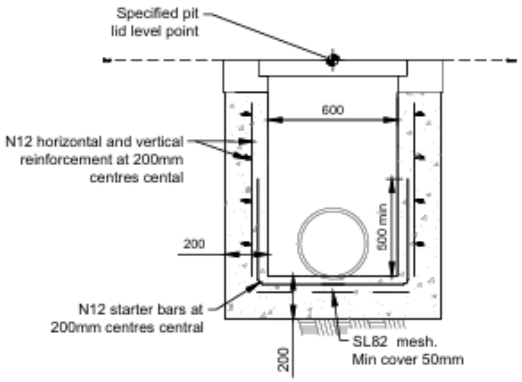

SECTION A
N.T.S.

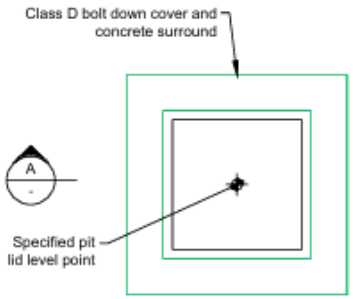

MANHOLE
N.T.S.

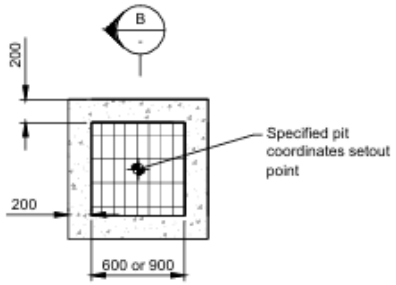

GRATED INLET PIT
N.T.S.

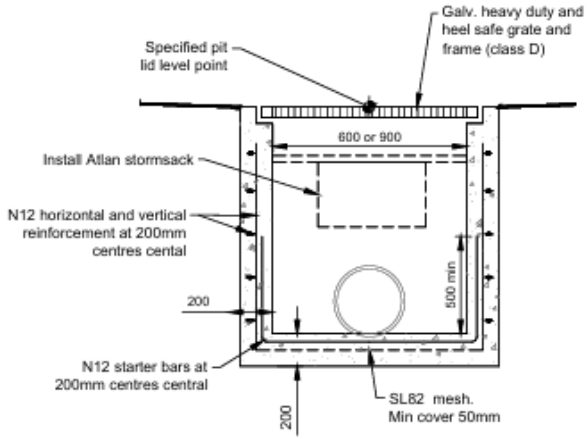

SECTION B
N.T.S.

MOUNT ISA CITY COUNCIL
DIGITAL STAMP
APPROVED PLAN
Application No.: P14-25
Development Approval: Development Permit for Operational Works
Applied Use: Road work, landscaping, stormwater, earthworks, water and sewerage infrastructure associated with child care centre development
Lot details: Lot 73 on Plan M75817
Street Address: 104 West Street Mount Isa
Approved by Decision Notice: 07 April 2026

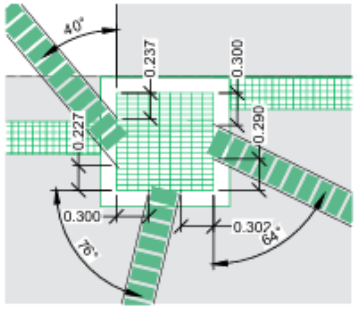

GRATED INLET PIT 1/2
1:50

POSITIONS OF EXISTING SERVICES SHOWN ARE PROVIDED FOR GUIDANCE ONLY AND LOCATIONS AND/OR DEPTHS MAY BE INCORRECT. ALSO ADDITIONAL EXISTING SERVICES MAY BE PRESENT ON SITE. IT IS THE RESPONSIBILITY OF THE CONTRACTOR TO VERIFY THE POSITION OF ALL EXISTING SERVICES ON SITE.

PRINT IN COLOUR

FOR APPROVAL
(NOT FOR CONSTRUCTION)

No.	Date	Revisions	Drafted	Designed	Approved	RPEQ No.
A	17/02/2026	FOR APPROVAL				19819

PARAGON Consulting Engineers Pty Ltd
Address: 96 Sydney Street, P.O. Box 1175, Mackay QLD 4740
Telephone: (07) 4957 7330
Facsimile: (07) 4957 7334
E-Mail: mail@paragonce.com
Web Site: www.paragonce.com
ABN No: 43 109 991 888

Client: MOUNT ISA DAY NURSERY AND KINDERGARTEN

Project: CHILDCARE CENTRE AT 104 WEST STREET, MENZIES

Detail: STORMWATER SETOUT AND DETAILS

Designed:	R.HUSKING	Scale(s):	N.T.S.
Reviewed:	B.PURNELL	Datum:	AHD
Approved:	B.PURNELL RPEQ 19819	PCE Job No:	3155-01
Drawing No:	3155-01-012	Rev. No:	A

RETAINING WALL SCHEDULE										
'H'	'W1'	'A' (mm)	'B' (mm)	'C' (mm)	'D' (mm)	'E'	'F'	'G'	'J'	'K'
≤ 800	140	350	180	1400	200	N12 at 400crs (min 500 lap)	N12 at 400crs	N12 at 400crs (500 lap)	N12 at 400crs (min 500 lap)	N12 at 400crs
801 to 1000	140	350	180	1600	200	N12 at 400crs (min 500 lap)	N12 at 400crs	N12 at 400crs (500 lap)	N12 at 400crs (min 500 lap)	N12 at 400crs
1001 to 1200	140	350	180	1800	200	N12 at 400crs (min 500 lap)	N12 at 400crs	N12 at 400crs (500 lap)	N12 at 400crs (min 500 lap)	N12 at 400crs
1201 to 1400	190	400	230	1900	250	N16 at 400crs (min 800 lap)	N12 at 400crs	N12 at 400crs (500 lap)	N12 at 400crs (min 500 lap)	N12 at 400crs
1401 to 1600	190	400	230	2100	250	N16 at 400crs (min 800 lap)	N16 at 400crs	N16 at 400crs (800 lap)	N12 at 400crs (min 500 lap)	N12 at 400crs

MOUNT ISA CITY COUNCIL
DIGITAL STAMP
APPROVED PLAN
Application No.: P14-25
Development Approval: Development Permit for Operational Works
Applied Use: Road work, landscaping, stormwater, earthworks, water and sewerage infrastructure associated with child care centre development
Lot details: Lot 73 on Plan M75817
Street Address: 104 West Street Mount Isa
Approved by Decision Notice: 07 April 2026

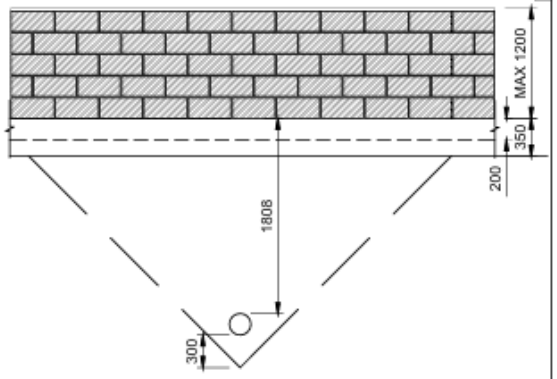

Retaining Wall over Sewer
Scale 1:50

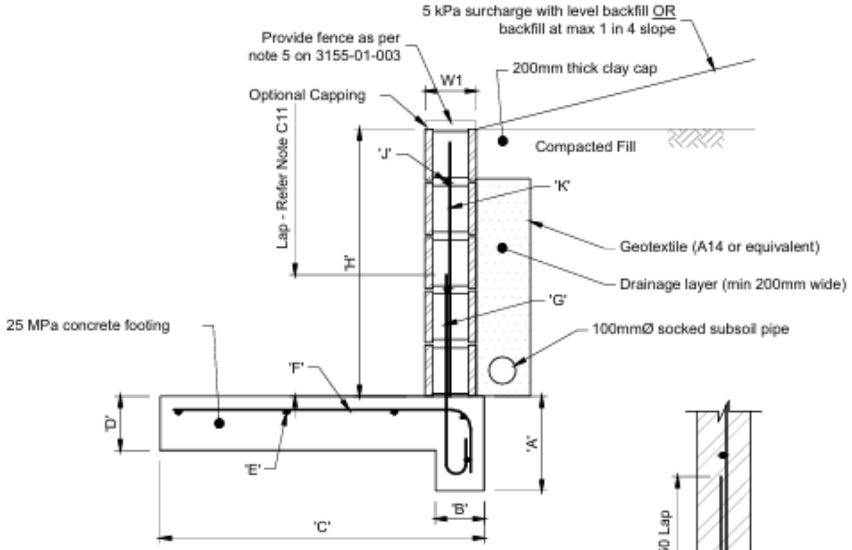

Note: Footing to be founded in firm stiff material with an allowable bearing pressure of at least 100 kPa.

TYPICAL RETAINING WALL DETAIL
N.T.S.

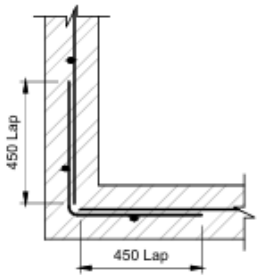

TYPICAL RETAINING WALL CORNER DETAIL
N.T.S.

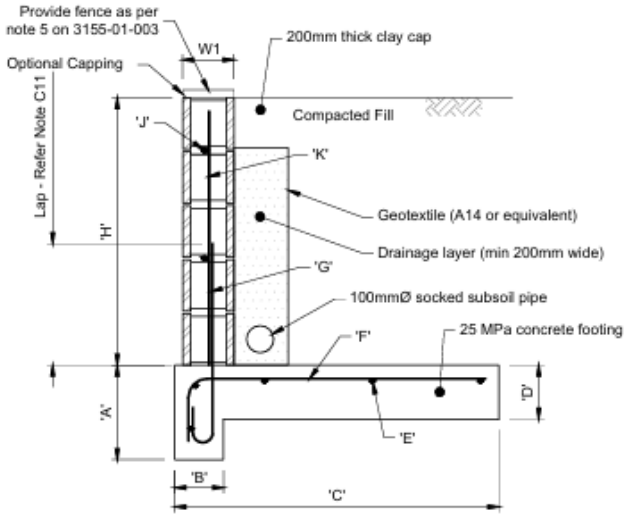

Note: Footing to be founded in firm stiff material with an allowable bearing pressure of at least 100 kPa.

TYPICAL RETAINING WALL DETAIL
N.T.S.

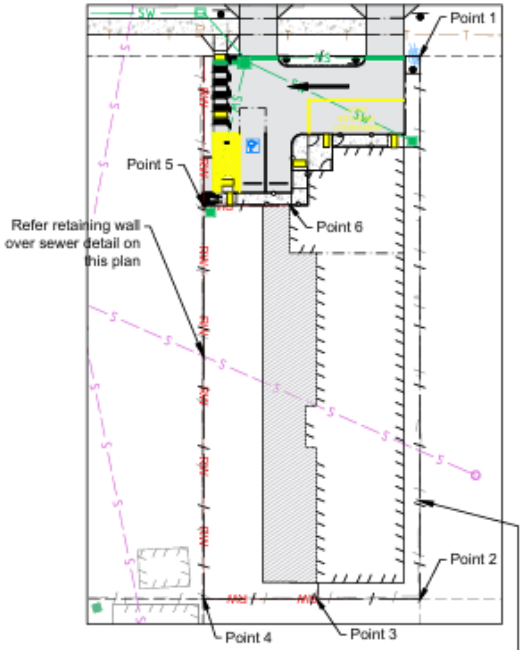

Refer structural drawing for existing retaining wall details

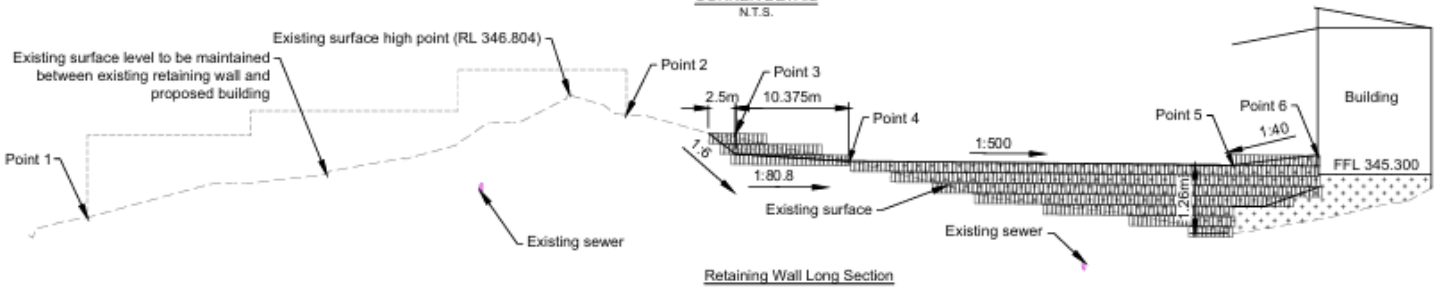

Retaining Wall Long Section

PRINT IN COLOUR

FOR APPROVAL
(NOT FOR CONSTRUCTION)

No.	Date	Revisions	Drafted	Designed	Approved	RPEQ No.
A	17/02/2026	FOR APPROVAL				21753

PARAGON Consulting Engineers Pty Ltd
Address: 96 Sydney Street, P.O. Box 1175, Mackay QLD 4740
Telephone: (07) 4957 7330
Facsimile: (07) 4957 7334
E-Mail: mail@paragonce.com
Web Site: www.paragonce.com
ABN No: 43 109 991 888

Client: MOUNT ISA DAY NURSERY AND KINDERGARTEN

Project: CHILDCARE CENTRE AT 104 WEST STREET, MENZIES

Detail: RETAINING WALL DETAILS

Designed:	R.HUSKING	Scale(s):	1:20 (A3)
Reviewed:	D.VERRDEN	Datum:	AHD
Approved:	D.VERRDEN RPEQ 21753	PCE Job No:	3155-01
Drawing No:	3155-01-015	Rev. No:	A

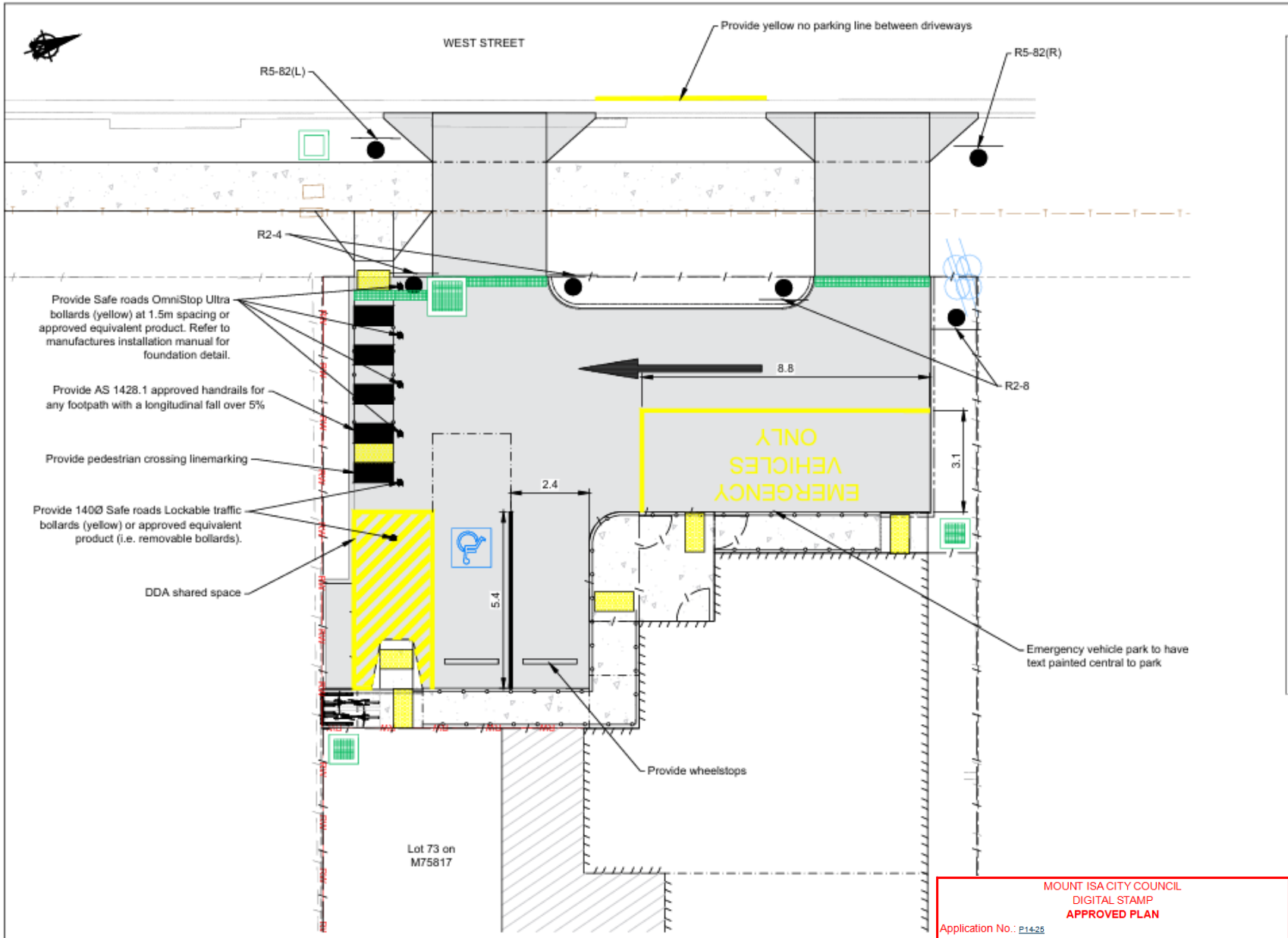

LEGEND

	Existing Lot Boundary
	Existing Change of Grade
	Existing Barrier Kerb & Channel
	Existing Building Edge
	Existing Concrete Edge
	Existing Fence
	Existing Signs
	Existing Trees
OE	Existing Overhead Electrical Line
	Existing Street Lighting
PP	Existing Power Poles
S	Existing Gravity Sewer & Manhole
SW	Existing Stormwater Pipe & Manhole
	Existing Stormwater Pits
W	Existing Potable Water Line & Fire Hydrant
	Existing Potable Water Gate Valve
	Existing Potable Water Meter
T	Existing Telecommunication Cable & Pit
RW	Proposed Retaining Wall
	Proposed Handrail
	Proposed Barrier Kerb & Channel
	Proposed Concrete Edge
	Proposed Building
	Proposed Fence
	Proposed Signs
SW	Proposed Stormwater Pipe & Manhole
	Proposed Stormwater Pits
	Proposed Concrete Pavement
	Proposed Concrete Area

ROADWORKS NOTES

1. All linemarking and signage to be in accordance with the current version of the 'Manual of Uniform Traffic Control Devices' (MUTCD).
2. Pavement turn arrows are to be installed as per the requirements of MUTCD, Part 2, clause 5.5.
3. All parking bays are to be 5.4m x 2.4m U.N.O.
4. TGSI are to be fibre reinforced polymer tiles installed with both adhesives and screws to prevent lifting and corner curling. TGSI are to be installed in accordance with AS/NZS1428.4:2009 "Design for access and mobility, Part 4.1: Means to assist the orientation of people with vision impairment -Tactile ground surface indicators".

MOUNT ISA CITY COUNCIL
DIGITAL STAMP
APPROVED PLAN
Application No.: P14-25
Development Approval: Development Permit for Operational Works
Applied Use: Road work, landscaping, stormwater, earthworks, water and sewerage infrastructure associated with child care centre development
Lot details: Lot 73 on Plan M75817
Street Address: 104 West Street Mount Isa
Approved by Decision Notice: 07 April 2026

POSITIONS OF EXISTING SERVICES SHOWN ARE PROVIDED FOR GUIDANCE ONLY AND LOCATIONS AND/OR DEPTHS MAY BE INCORRECT. ALSO ADDITIONAL EXISTING SERVICES MAY BE PRESENT ON SITE. IT IS THE RESPONSIBILITY OF THE CONTRACTOR TO VERIFY THE POSITION OF ALL EXISTING SERVICES ON SITE.

PRINT IN COLOUR

FOR APPROVAL
(NOT FOR CONSTRUCTION)

No.	Date	Revisions	Drafted	Designed	Approved	RPEQ No.
A	17/02/2026	FOR APPROVAL				19819

PARAGON Consulting Engineers Pty Ltd
Address: 96 Sydney Street, P.O. Box 1175, Mackay QLD 4740
Telephone: (07) 4957 7330
Facsimile: (07) 4957 7334
E-Mail: mail@paragonce.com
Web Site: www.paragonce.com
ABN No: 43 108 991 888

Client: MOUNT ISA DAY NURSERY AND KINDERGARTEN

Project: CHILDCARE CENTRE AT 104 WEST STREET, MENZIES

Detail: SIGNS, LINEMARKING & PARKING FURNITURE

Designed:	R.HUSKING	Scale(s):	1:125 (A3)
Reviewed:	B.PURNELL	Datum:	AHD
Approved:	B.PURNELL RPEQ 19819	PCE Job No:	3155-01
Drawing No:	3155-01-016	Rev. No:	A

ATTACHMENT 3

NOTICE ABOUT DECISION – STATEMENT OF REASONS

This Notice is prepared in accordance with s63(5) and s83(9) of the Planning Act 2016 to provide information about a decision that has been made in relation to a development application. The purpose of the Notice is to enable a public understanding of the reasons for the planning decision, specifically having regard to:

- *the relevant parts of the Planning Scheme and Assessment Benchmarks against which the application was assessed; and*
- *any other information, documents or other material Council was either required to, or able to, consider in its assessment.*

All terms used in this Notice have the meanings given them in the Planning Act 2016 or otherwise their ordinary meaning.

APPLICATION DETAILS

Application No:	P14-25
Applicant:	Mount Isa Day Nursery and Kindergarten Inc C/- Paragon Consulting Engineers Pty Ltd
Proposal:	Development Permit for Operational Work
Description of the Development:	Road work, landscaping, stormwater, earthworks, water and sewerage infrastructure associated with child care centre development
Street Address:	104 West Street, Mount Isa
Real Property Description:	Lot 73 on plan M75817
Planning Scheme:	*City of Mount Isa Planning Scheme 2020*
Land Zoning:	Medium Density Residential Zone
Assessment Type:	Code Assessment

DECISION DETAILS

Type of Decision:	Approved in Full with Conditions
Type of Approval:	Development Permit for Operational Works
Date of Decision:	07 April 2026

ASSESSMENT BENCHMARKS

The following Assessment Benchmarks applied to the development from the following Categorising Instruments:

Categorising Instrument (*Planning Regulation 2017*)

This application did not trigger any matters prescribed by the regulation

Categorising Instrument (State Planning Policy - July 2017)

The application did not trigger any matters prescribed by the policy.

Local Categorising Instrument (City of Mount Isa Planning Scheme 2020):

- Engineering Works and Services Code
- Excavation and Filling Code

Local Categorising Instrument (Variation Approval)

- Not applicable.

Local Categorising Instrument (Temporary Local Planning Instrument)

- Not applicable.

PUBLIC NOTIFICATION

Not applicable – no part of the application required public notification.

REASONS FOR THE DECISION

The application is **approved** on the following grounds:

a) The proposal is compliant with the assessment benchmarks and consistent with the City of Mount Isa Planning Scheme 2020.

REASONS FOR APPROVAL DESPITE NON-COMPLIANCE WITH ASSESSMENT BENCHMARKS

Not applicable.

ADDITIONAL RELEVANT MATTERS FOR IMPACT ASSESSMENT

Not applicable.

OTHER MATTERS PRESCRIBED BY THE PLANNING REGULATION 2017

Not applicable.

OTHER DETAILS

If you wish to obtain more information about Council's decision, please refer to Council's webpage at https://www.mountisa.qld.gov.au

ATTACHMENT 4

APPEAL RIGHTS

(Planning Act 2016 & Planning Regulation 2017)

Attached under separate cover (this page has been intentionally left blank)

(2) The person is taken to have engaged in the representative's conduct, unless the person proves the person could not have prevented the conduct by exercising reasonable diligence.

(3) In this section—

conduct means an act or omission.

representative means—

(a) of a corporation—an executive officer, employee or agent of the corporation; or

(b) of an individual—an employee or agent of the individual.

state of mind, of a person, includes the person's—

(a) knowledge, intention, opinion, belief or purpose; and

(b) reasons for the intention, opinion, belief or purpose.

Chapter 6 Dispute resolution

Part 1 Appeal rights

229 Appeals to tribunal or P&E Court

(1) Schedule 1 states—

(a) matters that may be appealed to—

(i) either a tribunal or the P&E Court; or

(ii) only a tribunal; or

(iii) only the P&E Court; and

(b) the person—

(i) who may appeal a matter (the ***appellant***); and

(ii) who is a respondent in an appeal of the matter; and

Authorised by the Parliamentary Counsel

(iii) who is a co-respondent in an appeal of the matter; and

(iv) who may elect to be a co-respondent in an appeal of the matter.

Note—

For limitations on appeal rights in relation to a development approval for development requiring social impact assessment, see section 106ZJ.

(2) An appellant may start an appeal within the appeal period.

(3) The ***appeal period*** is—

(a) for an appeal by a building advisory agency—10 business days after a decision notice for the decision is given to the agency; or

(b) for an appeal against a deemed refusal—at any time after the deemed refusal happens; or

(c) for an appeal against a decision of the Minister, under chapter 7, part 4, to register premises or to renew the registration of premises—20 business days after a notice is published under section 269(3)(a) or (4); or

(d) for an appeal against a decision of the Minister, under chapter 7, part 4, to amend the registration of premises to include additional land in the affected area for the premises—20 business days after the day a notice is published under section 269A(2)(a); or

(e) for an appeal against an infrastructure charges notice—20 business days after the infrastructure charges notice is given to the person; or

(f) for an appeal about a deemed approval of a development application for which a decision notice has not been given—30 business days after the applicant gives the deemed approval notice to the assessment manager; or

(g) for an appeal relating to the *Plumbing and Drainage Act 2018*—

(i) for an appeal against an enforcement notice given because of a belief mentioned in the *Plumbing and*

Authorised by the Parliamentary Counsel

Drainage Act 2018, section 143(2)(a)(i), (b) or (c)—5 business days after the day the notice is given; or

(ii) for an appeal against a decision of a local government or an inspector to give an action notice under the *Plumbing and Drainage Act 2018*—5 business days after the notice is given; or

(iii) for an appeal against a failure to make a decision about an application or other matter under the *Plumbing and Drainage Act 2018*—at anytime after the period within which the application or matter was required to be decided ends; or

(iv) otherwise—20 business days after the day the notice is given; or

(h) for any other appeal—20 business days after a notice of the decision for the matter, including an enforcement notice, is given to the person.

Note—

See the P&E Court Act for the court's power to extend the appeal period.

(4) Each respondent and co-respondent for an appeal may be heard in the appeal.

(5) If an appeal is only about a referral agency's response, the assessment manager may apply to the tribunal or P&E Court to withdraw from the appeal.

(6) To remove any doubt, it is declared that an appeal against an infrastructure charges notice must not be about—

(a) the adopted charge itself; or

(b) for a decision about an offset or refund—

(i) the establishment cost of trunk infrastructure identified in a LGIP; or

(ii) the cost of infrastructure decided using the method included in the local government's charges resolution.

Authorised by the Parliamentary Counsel

230 Notice of appeal

(1) An appellant starts an appeal by lodging, with the registrar of the tribunal or P&E Court, a notice of appeal that—

(a) is in the approved form; and

(b) succinctly states the grounds of the appeal.

(2) The notice of appeal must be accompanied by the required fee.

(3) The appellant or, for an appeal to a tribunal, the registrar, must, within the service period, give a copy of the notice of appeal to—

(a) the respondent for the appeal; and

(b) each co-respondent for the appeal; and

(c) for an appeal about a development application under schedule 1, section 1, table 1, item 1—each principal submitter for the application whose submission has not been withdrawn; and

(d) for an appeal about a change application under schedule 1, section 1, table 1, item 2—each principal submitter for the application whose submission has not been withdrawn; and

(e) each person who may elect to be a co-respondent for the appeal other than an eligible submitter for a development application or change application the subject of the appeal; and

(f) for an appeal to the P&E Court—the chief executive; and

(g) for an appeal to a tribunal under another Act—any other person who the registrar considers appropriate.

(4) The ***service period*** is—

(a) if a submitter or advice agency started the appeal in the P&E Court—2 business days after the appeal is started; or

(b) otherwise—10 business days after the appeal is started.

Authorised by the Parliamentary Counsel

(5) A notice of appeal given to a person who may elect to be a co-respondent must state the effect of subsection (6).

(6) A person elects to be a co-respondent to an appeal by filing a notice of election in the approved form—

(a) if a copy of the notice of appeal is given to the person—within 10 business days after the copy is given to the person; or

(b) otherwise—within 15 business days after the notice of appeal is lodged with the registrar of the tribunal or the P&E Court.

(7) Despite any other Act or rules of court to the contrary, a copy of a notice of appeal may be given to the chief executive by emailing the copy to the chief executive at the email address stated on the department's website for this purpose.

231 Non-appealable decisions and matters

(1) Subject to this chapter, section 316(2), schedule 1 and the P&E Court Act, unless the Supreme Court decides a decision or other matter under this Act is affected by jurisdictional error, the decision or matter is non-appealable.

(2) The *Judicial Review Act 1991*, part 5 applies to the decision or matter to the extent it is affected by jurisdictional error.

(3) A person who, but for subsection (1) could have made an application under the *Judicial Review Act 1991* in relation to the decision or matter, may apply under part 4 of that Act for a statement of reasons in relation to the decision or matter.

(4) In this section—

decision includes—

(a) conduct engaged in for the purpose of making a decision; and

(b) other conduct that relates to the making of a decision; and

Authorised by the Parliamentary Counsel

(c) the making of a decision or the failure to make a decision; and

(d) a purported decision; and

(e) a deemed refusal.

non-appealable, for a decision or matter, means the decision or matter—

(a) is final and conclusive; and

(b) may not be challenged, appealed against, reviewed, quashed, set aside or called into question in any other way under the *Judicial Review Act 1991* or otherwise, whether by the Supreme Court, another court, any tribunal or another entity; and

(c) is not subject to any declaratory, injunctive or other order of the Supreme Court, another court, any tribunal or another entity on any ground.

232 Rules of the P&E Court

(1) A person who is appealing to the P&E Court must comply with the rules of the court that apply to the appeal.

(2) However, the P&E Court may hear and decide an appeal even if the person has not complied with rules of the P&E Court.

Part 2 Development tribunal

Division 1 General

233 Appointment of referees

(1) The Minister, or chief executive, (the ***appointer***) may appoint a person to be a referee, by an appointment notice, if the appointer considers the person—

Authorised by the Parliamentary Counsel

(a) has the qualifications or experience prescribed by regulation; and

(b) has demonstrated an ability—

(i) to negotiate and mediate outcomes between parties to a proceeding; and

(ii) to apply the principles of natural justice; and

(iii) to analyse complex technical issues; and

(iv) to communicate effectively, including, for example, to write informed succinct and well-organised decisions, reports, submissions or other documents.

(2) The appointer may—

(a) appoint a referee for the term, of not more than 3 years, stated in the appointment notice; and

(b) reappoint a referee, by notice, for further terms of not more than 3 years.

(3) If an appointer appoints a public service officer as a referee, the officer holds the appointment concurrently with any other appointment that the officer holds in the public service.

(4) A referee must not sit on a tribunal unless the referee has given a declaration, in the approved form and signed by the referee, to the chief executive.

(5) The appointer may cancel a referee's appointment at any time by giving a notice, signed by the appointer, to the referee.

(6) A referee may resign the referee's appointment at any time by giving a notice, signed by the referee, to the appointer.

(7) In this section—

appointment notice means—

(a) if the Minister gives the notice—a gazette notice; or

(b) if the chief executive gives the notice—a notice given to the person appointed as a referee.

Authorised by the Parliamentary Counsel

234 Referee with conflict of interest

(1) This section applies if the chief executive informs a referee that the chief executive proposes to appoint the referee as a tribunal member, and either or both of the following apply—

(a) the tribunal is to hear a matter about premises—

(i) the referee owns; or

(ii) for which the referee was, is, or is to be, an architect, builder, drainer, engineer, planner, plumber, plumbing inspector, certifier, site evaluator or soil assessor; or

(iii) for which the referee has been, is, or will be, engaged by any party in the referee's capacity as an accountant, lawyer or other professional; or

(iv) situated or to be situated in the area of a local government of which the referee is an officer, employee or councillor;

(b) the referee has a direct or indirect personal interest in a matter to be considered by the tribunal, and the interest could conflict with the proper performance of the referee's functions for the tribunal's consideration of the matter.

(2) However, this section does not apply to a referee only because the referee previously acted in relation to the preparation of a relevant local planning instrument.

(3) The referee must notify the chief executive that this section applies to the referee, and on doing so, the chief executive must not appoint the referee to the tribunal.

(4) If a tribunal member is, or becomes, aware the member should not have been appointed to the tribunal, the member must not act, or continue to act, as a member of the tribunal.

235 Establishing development tribunal

(1) The chief executive may at any time establish a tribunal, consisting of up to 5 referees, for tribunal proceedings.

Authorised by the Parliamentary Counsel

(2) The chief executive may appoint a referee for tribunal proceedings if the chief executive considers the referee has the qualifications or experience for the proceedings.

(3) The chief executive must appoint a referee as the chairperson for each tribunal.

(4) A regulation may specify the qualifications or experience required for particular proceedings.

(5) After a tribunal is established, the tribunal's membership must not be changed.

236 Remuneration

A tribunal member must be paid the remuneration the Governor in Council decides.

237 Tribunal proceedings

(1) A tribunal must ensure all persons before the tribunal are afforded natural justice.

(2) A tribunal must make its decisions in a timely way.

(3) A tribunal may—

(a) conduct its business as the tribunal considers appropriate, subject to a regulation made for this section; and

(b) sit at the times and places the tribunal decides; and

(c) hear an appeal and application for a declaration together; and

(d) hear 2 or more appeals or applications for a declaration together.

(4) A regulation may provide for—

(a) the way in which a tribunal is to operate, including the qualifications of the chairperson of the tribunal for particular proceedings; or

(b) the required fee for tribunal proceedings.

Authorised by the Parliamentary Counsel

238 Registrar and other officers

(1) The chief executive may, by gazette notice, appoint—

(a) a registrar; and

(b) other officers (including persons who are public service officers) as the chief executive considers appropriate to help a tribunal perform its functions.

(2) A person may hold the appointment or assist concurrently with any other public service appointment that the person holds.

Division 2 Applications for declarations

239 Starting proceedings for declarations

(1) A person may start proceedings for a declaration by a tribunal by filing an application, in the approved form, with the registrar.

(2) The application must be accompanied by the required fee.

240 Application for declaration about making of development application

(1) The following persons may start proceedings for a declaration about whether a development application is properly made—

(a) the applicant;

(b) the assessment manager.

(2) However, a person may not seek a declaration under this section about whether a development application is accompanied by the written consent of the owner of the premises to the application.

(3) The proceedings must be started by—

(a) the applicant within 20 business days after receiving notice from the assessment manager, under the

Authorised by the Parliamentary Counsel

development assessment rules, that the development application is not properly made; or

(b) the assessment manager within 10 business days after receiving the development application.

(4) The registrar must, within 10 business days after the proceedings start, give notice of the proceedings to the respondent as a party to the proceedings.

(5) In this section—

respondent means—

(a) if the applicant started the proceedings—the assessment manager; or

(b) if the assessment manager started the proceedings—the applicant.

241 Application for declaration about change to development approval

(1) This section applies to a change application for a development approval if—

(a) the approval is for a material change of use of premises that involves the use of a classified building; and

(b) the responsible entity for the change application is not the P&E Court.

(2) The applicant, or responsible entity, for the change application may start proceedings for a declaration about whether the proposed change to the approval is a minor change.

(3) The registrar must, within 10 business days after the proceedings start, give notice of the proceedings to the respondent as a party to the proceedings.

(4) In this section—

respondent means—

(a) if the applicant started the proceedings—the responsible entity; or

Authorised by the Parliamentary Counsel

(b) if the responsible entity started the proceedings—the applicant.

Division 3 Tribunal proceedings for appeals and declarations

242 Action when proceedings start

If a document starting tribunal proceedings is filed with the registrar within the period required under this Act, and is accompanied by the required fee, the chief executive must—

(a) establish a tribunal for the proceedings; and

(b) appoint 1 of the referees for the tribunal as the tribunal's chairperson, in the way required under a regulation; and

(c) give notice of the establishment of the tribunal to each party to the proceedings.

243 Chief executive excusing noncompliance

(1) This section applies if—

(a) the registrar receives a document purporting to start tribunal proceedings, accompanied by the required fee; and

(b) the document does not comply with any requirement under this Act for validly starting the proceedings.

(2) The chief executive must consider the document and decide whether or not it is reasonable in the circumstances to excuse the noncompliance (because it would not cause substantial injustice in the proceedings, for example).

(3) If the chief executive decides not to excuse the noncompliance, the chief executive must give a notice stating that the document is of no effect, because of the noncompliance, to the person who filed the document.

Authorised by the Parliamentary Counsel

(4) The chief executive must give the notice within 10 business days after the document is given to the chief executive.

(5) If the chief executive does excuse the noncompliance, the chief executive may act under section 242 as if the noncompliance had not happened.

244 Ending tribunal proceedings or establishing new tribunal

(1) The chief executive may decide not to establish a tribunal when a document starting tribunal proceedings is filed, if the chief executive considers it is not reasonably practicable to establish a tribunal.

Examples of when it is not reasonably practicable to establish a tribunal—

- there are no qualified referees or insufficient qualified referees because of a conflict of interest
- the referees who are available will not be able to decide the proceedings in a timely way

(2) If the chief executive considers a tribunal established for tribunal proceedings—

(a) does not have the expertise to hear or decide the proceedings; or

(b) is not able to make a decision for proceedings (because of a tribunal member's conflict of interest, for example);

the chief executive may decide to suspend the proceedings and establish another tribunal, complying with section 242(c), to hear or re-hear the proceedings.

(3) However, the chief executive may instead decide to end the proceedings if the chief executive considers it is not reasonably practicable to establish another tribunal to hear or re-hear the proceedings.

(4) If the chief executive makes a decision under subsection (1) or (3), the chief executive must give a decision notice about the decision to the parties to the proceedings.

(5) Any period for starting proceedings in the P&E Court, for the matter that is the subject of the tribunal proceedings, starts

Authorised by the Parliamentary Counsel

again when the chief executive gives the decision notice to the party who started the proceedings.

(6) The decision notice must state the effect of subsection (5).

245 Refunding fees

The chief executive may, but need not, refund all or part of the fee paid to start proceedings if the chief executive decides under section 244—

(a) not to establish a tribunal; or

(b) to end the proceedings.

246 Further material for tribunal proceedings

(1) The registrar may, at any time, ask a person to give the registrar any information that the registrar reasonably requires for the proceedings.

Examples of information that the registrar may require—

- material about the proceedings (plans, for example)
- information to help the chief executive decide whether to excuse noncompliance under section 243
- for a deemed refusal—a statement of the reasons why the entity responsible for deciding the application had not decided the application during the period for deciding the application.

(2) The person must give the information to the registrar within 10 business days after the registrar asks for the information.

247 Representation of Minister if State interest involved

If, before tribunal proceedings are decided, the Minister decides the proceedings involve a State interest, the Minister may be represented in the proceedings.

248 Representation of parties at hearing

A party to tribunal proceedings may appear—

Authorised by the Parliamentary Counsel

(a) in person; or

(b) by an agent who is not a lawyer.

249 Conduct of tribunal proceedings

(1) Subject to section 237, the chairperson of a tribunal must decide how tribunal proceedings are to be conducted.

(2) The tribunal may decide the proceedings on submissions.

(3) If the proceedings are to be decided on submissions, the tribunal must give all parties a notice asking for the submissions to be made to the tribunal within a stated reasonable period.

(4) Otherwise, the tribunal must give notice of the time and place of the hearing to all parties.

(5) The tribunal may decide the proceedings without a party's submission (written or oral) if—

(a) for proceedings to be decided on submissions—the party's submission is not received within the time stated in the notice given under subsection (3); or

(b) for proceedings to be decided by hearing—the person, or the person's agent, does not appear at the hearing.

(6) When hearing proceedings, the tribunal—

(a) need not proceed in a formal way; and

(b) is not bound by the rules of evidence; and

(c) may inform itself in the way it considers appropriate; and

(d) may seek the views of any person; and

(e) must ensure all persons appearing before the tribunal have a reasonable opportunity to be heard; and

(f) may prohibit or regulate questioning in the hearing.

(7) If, because of the time available for the proceedings, a person does not have an opportunity to be heard, or fully heard, the person may make a submission to the tribunal.

Authorised by the Parliamentary Counsel

250 Tribunal directions or orders

A tribunal may, at any time during tribunal proceedings, make any direction or order that the tribunal considers appropriate.

Examples of directions—

- a direction to an applicant about how to make their development application comply with this Act
- a direction to an assessment manager to assess a development application, even though the referral agency's response to the assessment manager was to refuse the application

251 Matters tribunal may consider

(1) This section applies to tribunal proceedings about—

(a) a development application or change application; or

(b) an application or request (however called) under an applicable Act if—

(i) the application or request relates to a decision made under that Act, other than a decision made by the Queensland Building and Construction Commission; and

(ii) an information notice about the decision was given or was required to be given under that Act.

(2) The tribunal must decide the proceedings based on the laws in effect when—

(a) the application or request was properly made; or

(b) if the application or request was not required to be properly made—the application or request was made.

(3) However, the tribunal may give the weight that the tribunal considers appropriate, in the circumstances, to any new laws.

(4) In this section—

applicable Act means—

(a) the Building Act; or

(b) the *Plumbing and Drainage Act 2018*.

Authorised by the Parliamentary Counsel

252 Deciding no jurisdiction for tribunal proceedings

(1) A tribunal may decide that the tribunal has no jurisdiction for tribunal proceedings, at any time before the proceedings are decided—

(a) on the tribunal's initiative; or

(b) on the application of a party.

(2) If the tribunal decides that the tribunal has no jurisdiction, the tribunal must give a decision notice about the decision to all parties to the proceedings.

(3) Any period for starting proceedings in the P&E Court, for the matter that is the subject of the tribunal proceedings, starts again when the tribunal gives the decision notice to the party who started the proceedings.

(4) The decision notice must state the effect of subsection (3).

(5) If the tribunal decides to end the proceedings, the fee paid to start the proceedings is not refundable.

253 Conduct of appeals

(1) This section applies to an appeal to a tribunal.

(2) Generally, the appellant must establish the appeal should be upheld.

(3) However, for an appeal by the recipient of an enforcement notice, the enforcement authority that gave the notice must establish the appeal should be dismissed.

(4) The tribunal must hear and decide the appeal by way of a reconsideration of the evidence that was before the person who made the decision appealed against.

(5) However, the tribunal may, but need not, consider—

(a) other evidence presented by a party to the appeal with leave of the tribunal; or

(b) any information provided under section 246.

(6) In this section—

Authorised by the Parliamentary Counsel

enforcement notice includes an enforcement notice under the *Plumbing and Drainage Act 2018*.

254 Deciding appeals to tribunal

(1) This section applies to an appeal to a tribunal against a decision.

(2) The tribunal must decide the appeal by—

(a) confirming the decision; or

(b) changing the decision; or

(c) replacing the decision with another decision; or

(d) setting the decision aside, and ordering the person who made the decision to remake the decision by a stated time; or

(e) for a deemed refusal of an application—

(i) ordering the entity responsible for deciding the application to decide the application by a stated time and, if the entity does not comply with the order, deciding the application; or

(ii) deciding the application; or

(f) for a failure to make a decision about an application or other matter under the *Plumbing and Drainage Act 2018*—

(i) ordering the entity responsible for deciding the application or matter to decide the application or matter by a stated time and, if the entity does not comply with the order, deciding the application or matter; or

(ii) deciding the application or matter.

(3) However, the tribunal must not make a change, other than a minor change, to a development application.

(4) The tribunal's decision takes the place of the decision appealed against.

Authorised by the Parliamentary Counsel

(5) The tribunal's decision starts to have effect—

(a) if a party does not appeal the decision—at the end of the appeal period for the decision; or

(b) if a party appeals against the decision to the P&E Court—subject to the decision of the court, when the appeal ends.

255 Notice of tribunal's decision

A tribunal must give a decision notice about the tribunal's decision for tribunal proceedings, other than for any directions or interim orders given by the tribunal, to all parties to proceedings.

256 No costs orders

A tribunal must not make any order as to costs.

257 Recipient's notice of compliance with direction or order

If a tribunal directs or orders a party to do something, the party must notify the registrar when the thing is done.

258 Tribunal may extend period to take action

(1) This section applies if, under this chapter, an action for tribunal proceedings must be taken within a stated period or before a stated time, even if the period has ended or the time has passed.

(2) The tribunal may allow a longer period or a different time to take the action if the tribunal considers there are sufficient grounds for the extension.

259 Publication of tribunal decisions

The registrar must publish tribunal decisions under the arrangements, and in the way, that the chief executive decides.

Authorised by the Parliamentary Counsel